PAGE	419

BY	CHK	REVISION RECORD MODIFICATIONS	DATE	REV.
ALLEN		RELEASE TO PRODUCTION	2007,9,12	1.0

MATERIAL & FINISH
HOUSING: Glass Fiber, PBT. UL94V-0
CONTACT: 0.35mm thickness phosphor bronze,
Gold plated over Nickel on contact area,
Tin plated over Nickel on solder area.

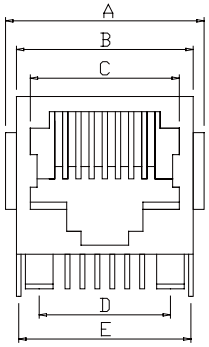

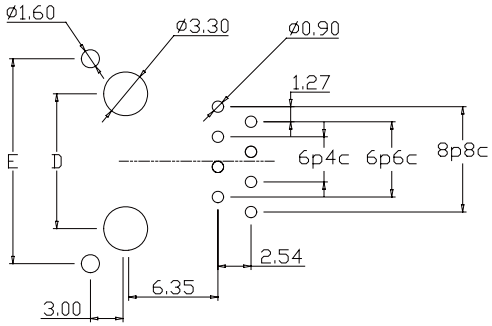

Recommended PCB Layout
(PCB TOLERANCE±0.05)

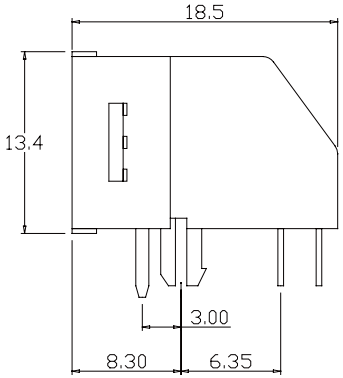

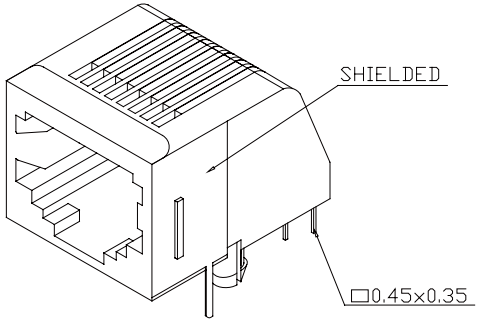

S 2 5 3 E - X P X C - X B - L

- XP: Number of position (6P,8P)
- XC: Number of contact (4c,6c,8c)
- X: Gold Plated
  - GA:Gold 6u"
  - GB:Gold 15u"
  - GC:Gold 30u"
  - GD:Gold 50u"
- B: B:Black Insulator
- L: L:RoHS+P.B.T

POSITION	CONTACT	A	B	C	D	E
6P	2C/4C/6C	15.75	13.90	9.90	10.16	13.70
8P	8C	17.75	16.00	11.93	11.43	15.65

APPRO	CHECK	DRAWN	PART NO.	S253E-XPXC-XB-L			DESCRIPTION	VIGORTEC
			ITEM NO.					
			DRAW NO.					
			UNIT	mm	SCALE	no		
			TOLER		NO.		Tel: 0769 22020068 Fax: 0769 22020069 E-mail: sales@vigortec.com	